CELETTE

PORSCHE 911 TURBO 77 →

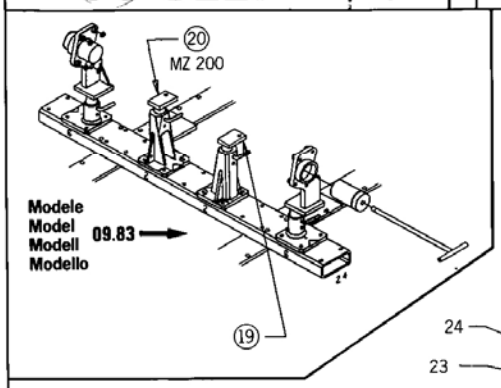

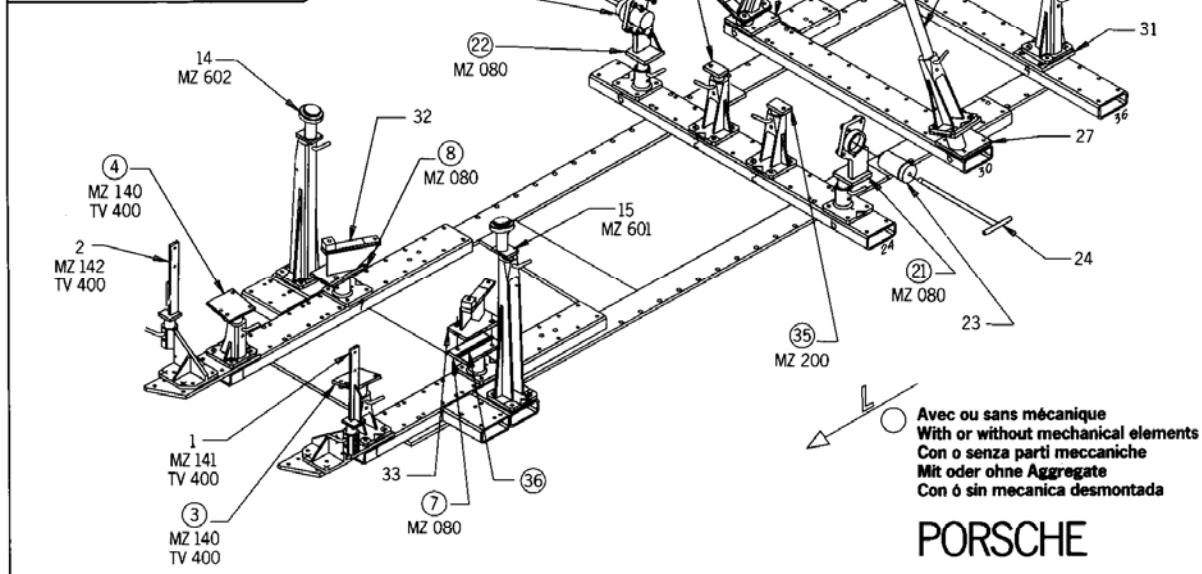

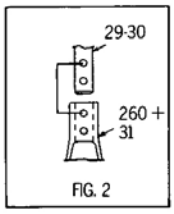

FIG. 2

REP.	REFERENCE	PDS.	NB	MZ
31	551.731	2,8	2	
32	551.732	4,0	1	
33	551.733	4,0	1	
34	551.734	1,4	1	200
35	551.735	1,4	1	200
40	551.740	2,9	1	
41	551.741	2,9	1	
	M 10 x 25		2	
	M 12 x 30		4	
	M 12 x 25		8	
	M 12.150 x 30		2	
	M 12.150 x 60		2	
	CHC 12 x 25 TB		8	
	M 12.150 x 110		2	

COMPLÉMENT AU
COMPLEMENTO ALL
ZUSATZ ZU
COMPLEMENTARY SET TO
COMPLEMENTO AL
551.300

Avec ou sans mécanique
With or without mechanical elements
Con o senza parti meccaniche
Mit oder ohne Aggregate
Con ó sin mecanica desmontada

PORSCHE

551.309

23 kg	22.11.88	425 - D - 3 C

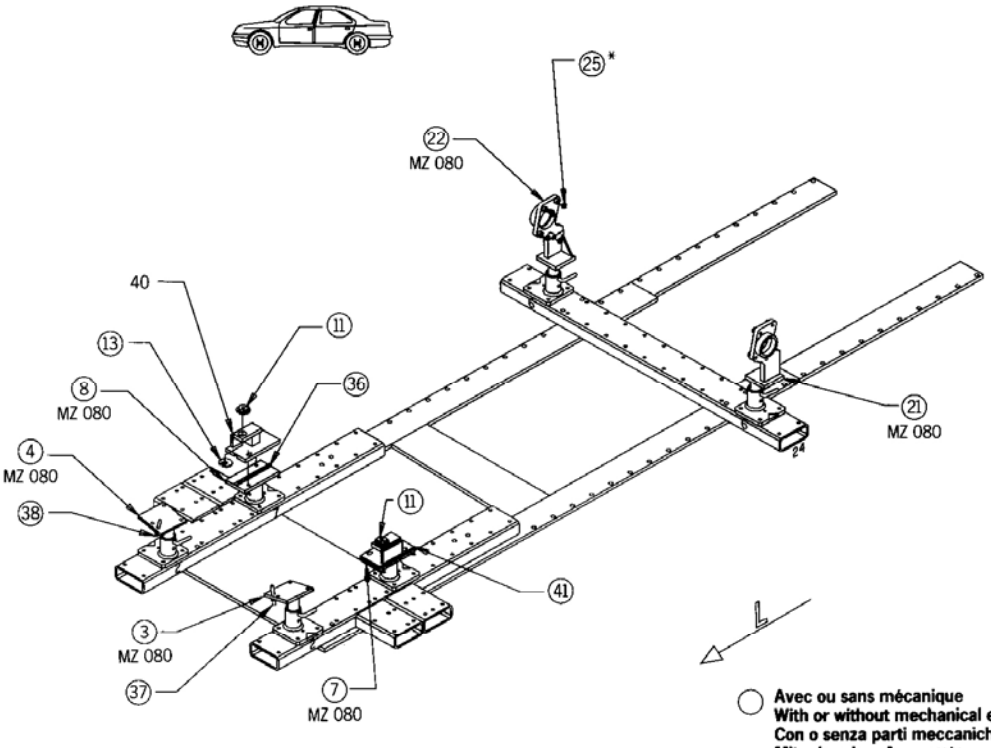

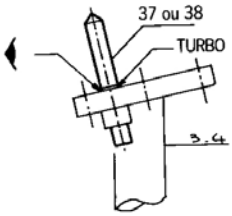

Fig. 1

COMPLÉMENT AU
COMPLEMENTO ALL
ZUSATZ ZU
COMPLEMENTARY SET TO
COMPLEMENTO AL
551.300

Avec ou sans mécanique
With or without mechanical elements
Con o senza parti meccaniche
Mit oder ohne Aggregate
Con ó sin mecanica desmontada

551.309

23 kg	22.11.88	425 - D - 3 D

CELETTE
VIENNE-FRANCE

© Copyright 1989 CELETTE S.A. - All rights reserved. No part of this document may be reproduced in any form, by photostat, xerography or any other means, or incorporated into any informational retrieval system, electronic or mechanical, without the permission of the copyright owner.